Ulti-Mate Connectors

Ulti-Mate Micro-D PCB

Vertical Angle .075 X .100 (Style 17) Connectors

Winchester Interconnect Micro offers Vertical Angle .075 X .075 (Style 17) Connectors. Style 17 is a condensed footprint vertical connector designed for flex circuit applications where the use of a jackscrew is necessary. Sharing the same condensed footprint as Style 7, it is recommended as a drop-in replacement for the MR75 series industry standard. Spacing between rows and between contacts in any one row is 0.075 on the 9 through 100 layouts.

KEY FEATURES & BENEFITS

- Condensed Footprint Design – Optimized for flex circuit applications.
- Jackscrew Compatible – Provides secure retention in flex assemblies.
- MR75 Series Compatible – Drop-in replacement for the industry standard.
- Uniform Spacing – 0.075 between rows and contacts on 9–100 layouts.
- Compact and Efficient – Ideal for high-density, space-constrained designs.
- Reliable Connectivity – Ensures consistent performance in demanding environments.

DIMENSIONAL

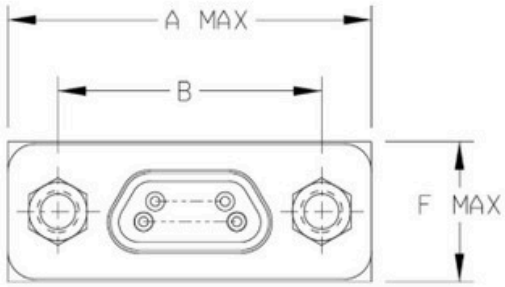

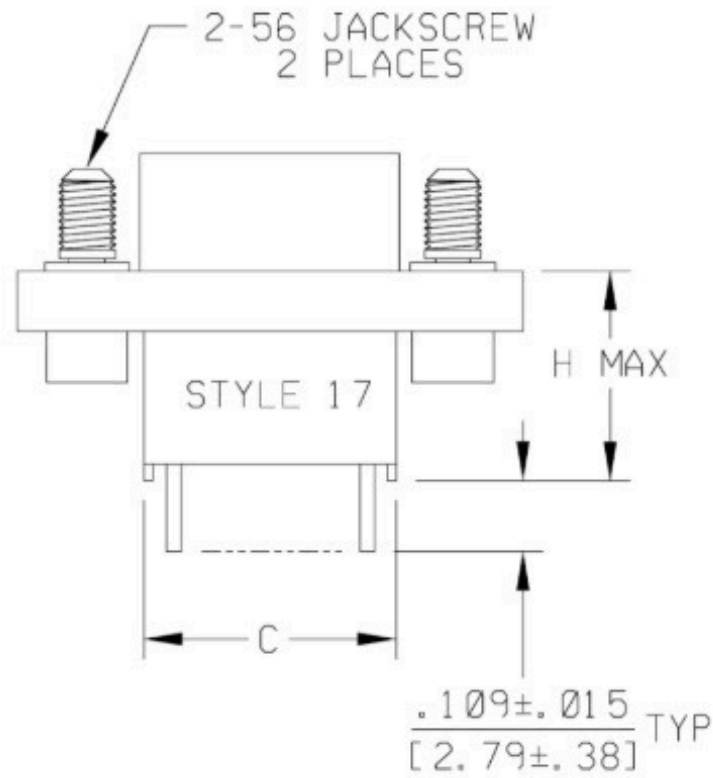

Size	A Max.	B Nom.	C Max.	F Max.	H Max.
9	.785 (19.94)	.565 (14.35)	.400 (10.16)	.310 (7.87)	.330 (8.38)
15	.935 (23.75)	.715 (18.16)	.550 (13.97)	.310 (7.87)	.330 (8.38)
21	1.085 (27.56)	.865 (21.97)	.700 (17.78)	.310 (7.87)	.330 (8.38)
25	1.185 (30.10)	.965 (24.51)	.800 (20.32)	.310 (7.87)	.330 (8.38)
31	1.335 (33.91)	1.115 (28.32)	.950 (24.13)	.310 (7.87)	.330 (8.38)
37	1.485 (37.72)	1.265 (32.13)	1.100 (27.94)	.310 (7.87)	.330 (8.38)
51-3	1.435 (36.45)	1.215 (30.86)	1.045 (26.54)	.400 (10.16)	.345 (8.76)

PERFORMANCE

Electrical Properties	
Contact Resistance	8 millihom max contact only + any solid lead resistance (depends on wire AWG) @ 2.5A
Current Rating	3A max.
Dielectric WithStanding Voltage	600 VAC at sea level, 150 VAC at 70,000 feet. 1mA leakage current max.
Insulation Resistance	500 VDC and 5000 Megohms min.

Mechanical Properties	
Engaging Force	6 oz max. (Signal contacts only, no data for Power or Coax contacts)
Separation Force	.5 oz. min. (Signal contacts only, no data for Power or Coax contacts)
Mating/Unmating Force	10 oz x # of contacts max. (Signal contacts only, no data for Power or Coax contacts)
Vibration	EIA-364-28 Condition IV, 1 microsecond max discontinuity
Shock	EIA-364-27 Condition E, 1 microsecond max discontinuity
Durability	500 matings, passes Mating Force, CR, Eng and Sep Forces
Salt Spray	EIA 364-26 Condition B-48 hours

MATERIALS

Materials and Finishes	
Signal Pin Contacts	C17200 Beryllium Copper per ASTM B194
Signal Socket Contacts	C21000 Brass Alloy per ASTM B36
Contact Plating	.000050 Thk Gold Plating per ASTM B488
PC Tails	Copper Wire per A-A-59551 Type S
PC Tail Plating	.000320 min thk Tin plating per ASTM B545, or .000300 min thk Tin/Lead with minimum 3% lead plating per SAE-AMS-P-81728, or .000010 thk Gold plating per ASTM B488
Shell	6061-T6 Aluminum per SAE-AMS-QQ-A200/8 or Passivated 300 Series Stainless Steel
Shell Plating	Electroless Nickel per AMS 2404 or Cadmium Plated per SAE-AMS-QQ-P-416
Insulator Material	Polyphenylene Sulfide (PPS) Per MIL-M-24519 GST-40F
Hardware	Passivated Stainless Steel Per MIL-DTL-83513/05
Interfacial Seals	Fluorosilicone per MIL-R-25988 (Std Profile Receptacles only)

HOW TO ORDER

C M 7 R 25 P 07 T - 24 C 4 - 0.140 - RPM - 0.062 - S01 - HT SPL

Micro-D Circuit Series

Shell Material & Profile
M = Metal Shell, Std Profile
B = Plastic Shell, Std Profile

Backshell Style/Grid Pattern

17 = Straight (Vertical) .075 X .075 (Male Hardware)

Insulator Material
R = PPS

Size (No. of Contacts)
09, 15, 21, 25, 31, 37, 51-3, & 100

Contact Gender & Type
P = Pin, Crimp Type
S = Socket, Crimp Type

Hardware
0 = No Hardware
02 = Low Profile Hex Head Jackscrew (12 for size 100)*
03 = High Profile Hex Head Jackscrew (13 for size 100)*
05 = Low Profile Slotted Head Jackscrew (15 for size 100)*
06 = High Profile Slotted Head Jackscrew (16 for size 100)*
07 = Jackposts (17 for size 100)
22 = Captive Low Profile Hex Head Jackscrews*
23 = Captive High Profile Hex Head Jackscrews*
27 = Helicoil in Flange
0F = Float Mount hardware*
07E = Extended jackpost for .196 thk PCB (17E for size 100)
*Hardware only available in backshell style 17

Threaded Insert (Omit if threaded insert not requried)
T = Threaded Insert in Backshell

Wire Gauge
24**, 25, 26, & 30

Wire Type
C = Solid Wire**

Wire Plating
3 = Pure Tin Plated (RoHS Compliant)**
4 = Gold (.000050 min.) Plated (RoHS Compliant)
5 = Gold (.000010 min.) Plated (RoHS Compliant)
L = Tin/Lead (minimum 3% Lead) Plated (Non-RoHS)
(Not available with high temp (HT) connectors)

Lead Length (in inches)
Blank = 0.109**
Other Lengths = 0.140, 0.172
(Consult Factory for additional lengths)

Panel Mount Options (Omit if panel mounting not required)
(Only available on standard profile metal shells)
RPM = Rear Panel Mount
RPMS = Rear Panel Mount, Sealed w/O-ring
RPMSC = Rear Panel Mount, Sealed w/Conductive O-ring

Panel Thickness (Omit if panel mounting not required) (Thickness in inches)
Available for .031, .047, .062, .080, .094, .125 thick panels
(Consult Factory for additional Panel Thicknesses)

Shell Plating or Material (Omit for plastic shell or cadmium plating)
Blank = Cadmium
S01 = Electroless Nickel
S02 = Chem Film
S03 = Black Anodized
S04 = Gold
S05 = Titanium
S06 = Olive-Drab Cadmium
S07 = Black Nickel
S08 = Nickel-PTFE
S09 = Stainless Steel, Passivated
S10 = Zinc Nickel

Temperature Rating (Omit for standard Temp, 125°C)
Blank = 125°C
HT = 200°C

Special designator - SPL is to be added to the end of the part number if the connector cannot be fully defined by the rest of the engineering number

**For 24 AWG, Pure Tin Plated, 0.109 Length Leads this section of the part number may be omitted

Winchester Interconnect.